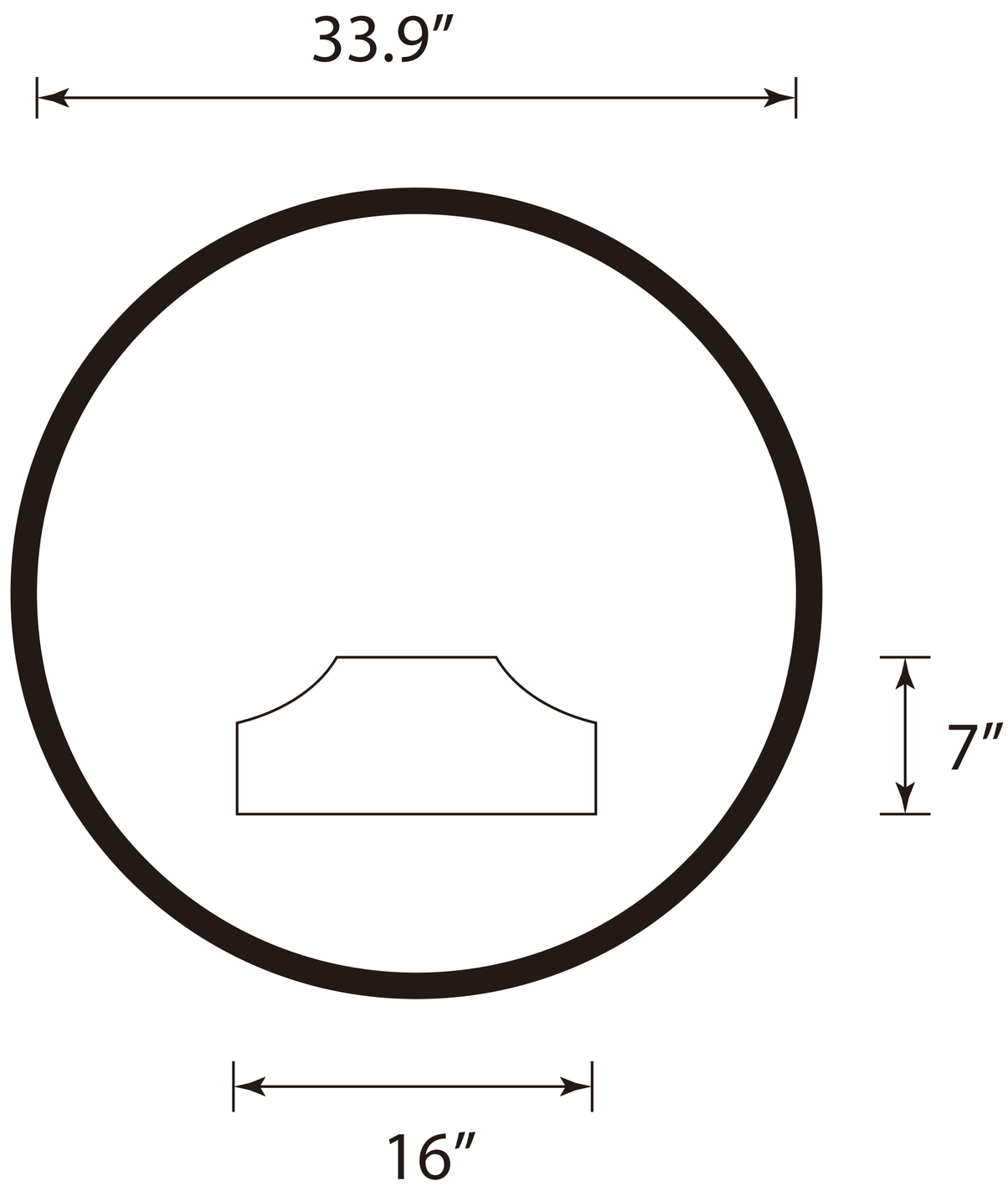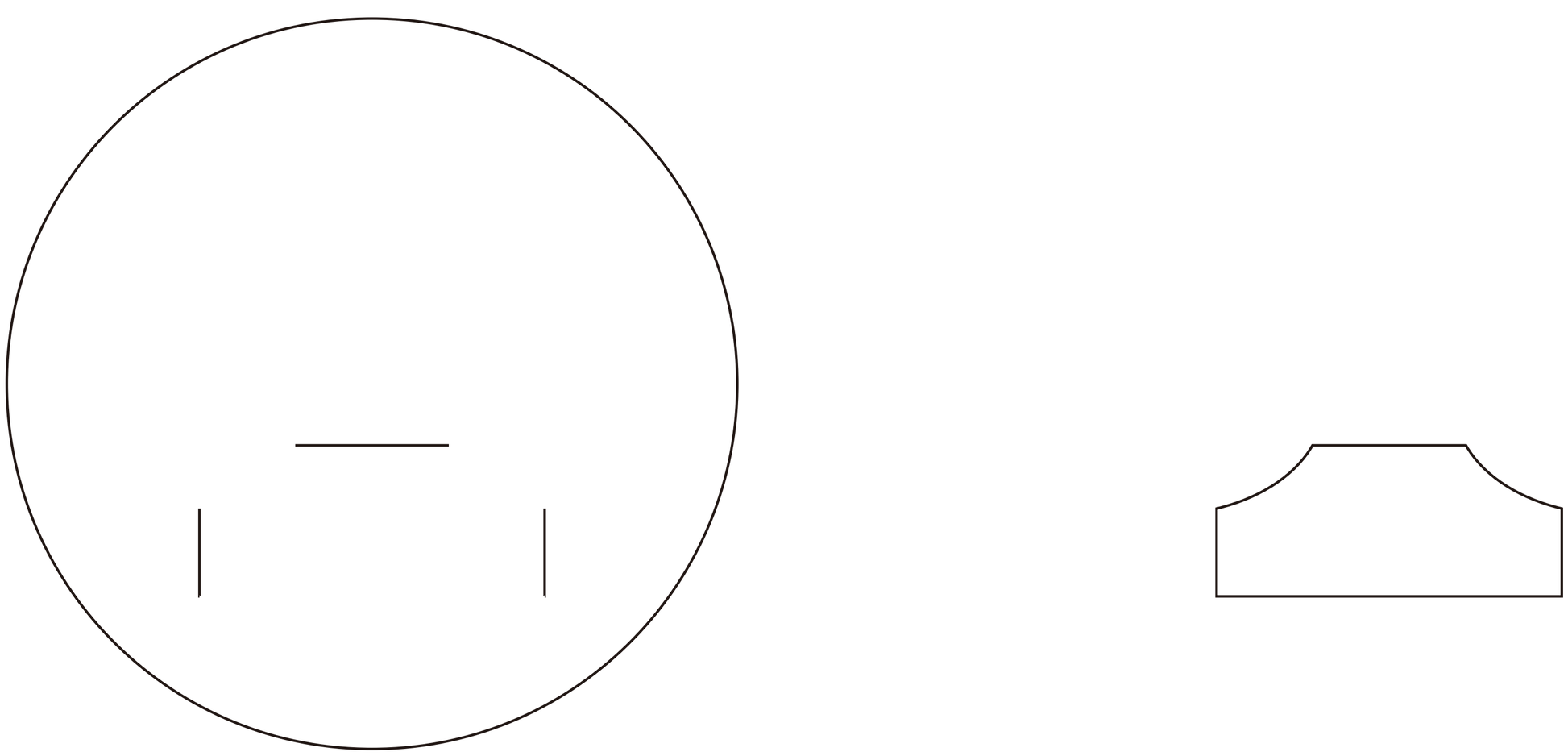39.4″-240G